VALLEY ARMORY

OWNER'S MANUAL

# LQ22

## LIGHTWEIGHT QUIET

### .22 LR RIMFIRE SUPPRESSOR

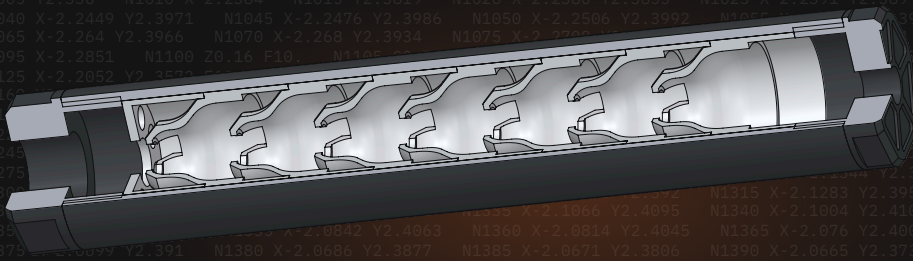

**READ THIS ENTIRE MANUAL BEFORE INSTALLING, FIRING, CLEANING, OR SERVICING YOUR SUPPRESSOR.**

Failure to follow these instructions can result in serious injury, death, or damage to the suppressor and firearm.

# THANK YOU FOR CHOOSING THE LQ22

The LQ22 is a lightweight, fully user-serviceable .22 LR suppressor. This manual explains how to install it safely, take it apart, clean it, and put it back together correctly. Keep it with your suppressor for future reference.

## CONTENTS


Firearm safety ..... 3

Suppressor warnings ..... 4

Ownership & legal requirements ..... 5

Overview & specifications ..... 6

Components ..... 7

Inside the LQ22 ..... 8

Ammunition & host firearms ..... 9

Installing on your firearm ..... 10

Removing & storage ..... 12

Disassembly ..... 13

Cleaning ..... 15

Inspection ..... 17

Reassembly ..... 18

Troubleshooting ..... 21

Limited lifetime warranty ..... 22

Owner's record ..... 23

# FIREARM SAFETY

A suppressor makes a firearm quieter. It does not make it any less dangerous. Treat a suppressed firearm with exactly the same care as any other firearm, and follow these rules every time.

1. **Treat every firearm as if it is loaded.** Never assume a firearm is unloaded. Check it yourself every time you handle it.
2. **Never point the muzzle at anything you are not willing to destroy,** including while you install, remove or tighten the suppressor.
3. **Keep your finger off the trigger** until your sights are on the target and you have decided to fire.
4. **Be sure of your target and what is beyond it.** A suppressor does not reduce how far a bullet travels.
5. **Unload before you touch the suppressor.** Remove the magazine, open the action, and visually and physically confirm the chamber is empty before you install, remove, tighten or service the suppressor.
6. **Wear eye and hearing protection.** A suppressed .22 LR is still loud enough to damage hearing. Everyone nearby needs protection too.
7. **Never shoot under the influence** of alcohol, drugs or medication that impairs judgment or coordination.
8. **Store firearms and suppressors securely,** locked and out of reach of children and unauthorized people. Store ammunition separately.

**⚠ WARNING**

Do not use this product unless you understand safe firearm handling. If you are unsure of any procedure in this manual, stop and contact Valley Armory or a qualified gunsmith before continuing.

# SUPPRESSOR WARNINGS

**⚠ WARNING**

### HOT SURFACES

A suppressor gets hot fast and stays hot long after firing. It can cause severe burns and ignite paper, cloth or dry grass. Let it cool completely before touching, removing or casing it. Wear heat-resistant gloves to handle a warm suppressor.

**⚠ WARNING**

### OBSTRUCTIONS

Never fire with anything in the bore: mud, snow, water, a patch, a dowel or debris. If it has been submerged or has liquid inside, drain it and let it dry before firing. A blocked bore can make the suppressor rupture.

**⚠ WARNING**

### LOOSENING

Thread-mounted suppressors can work loose as they heat and cool, which can let a bullet strike a baffle. After unloading, check that it is tight at the start of every session and after every magazine.

**⚠ WARNING**

### BAFFLE STRIKES

A bullet that hits a baffle or the front cap can destroy the suppressor and throw fragments. Causes include a suppressor not seated on the shoulder, out-of-line threads, incorrect reassembly and unsuitable ammunition.

**⚠ WARNING**

### LEAD EXPOSURE

Shooting and cleaning expose you to lead. Work in well-ventilated areas and wear nitrile gloves when cleaning. Do not eat, drink or smoke while handling fouled parts, and wash your hands afterward.

**⚠ WARNING**

### MODIFICATION

Never modify, drill, machine or alter any part of the LQ22, and never fire it with parts missing. Modifying a suppressor is dangerous and may be illegal.

# OWNERSHIP & LEGAL REQUIREMENTS

In the United States, suppressors are regulated by the National Firearms Act (NFA). Federal law treats the LQ22 as a firearm in its own right.

### POSSESSION

Only a person or entity whose transfer has been approved by the Bureau of Alcohol, Tobacco, Firearms and Explosives (ATF) and registered to them may possess the LQ22. Possession must also be permitted by your state and local laws.

### PARTS & REPAIRS

Under federal law, any part intended only for use in a suppressor is itself regulated as a suppressor. Do not make, buy or install replacement parts from any source other than Valley Armory. Contact us for all repairs and parts.

### RECORDS

Keep your approved registration paperwork somewhere safe. We recommend carrying a copy with the suppressor.

### TRAVEL, HUNTING & USE

Suppressor and hunting laws vary by state and change over time. Before you travel with the LQ22 or hunt with it, confirm it is legal at your destination and along the way. Follow the law about who may possess or use it, and never leave it where anyone else can get to it.

### SELLING OR TRANSFERRING

A new ATF-approved transfer is required before anyone else takes possession. A licensed dealer can help. The Valley Armory warranty does not transfer to a new owner.

***NOTICE***

This page is a general summary, not legal advice. You are responsible for knowing and following every law that applies to you. If you have questions, contact the ATF or a qualified attorney.

# OVERVIEW & SPECIFICATIONS

A 7075 aluminum tube holds a blast damper and seven identical baffles between a threaded mount and a front cap. Every internal part slides out for cleaning.

| | |
|---|---|
| **CALIBER** | .22 Long Rifle only |
| **MOUNT** | 1/2"-28 TPI direct thread |
| **BARREL THREAD LENGTH** | 0.70 in. (17.8 mm) maximum |
| **OVERALL LENGTH** | 5.62 in. (142.6 mm) |
| **DIAMETER** | 1.00 in. (25.3 mm) |
| **WEIGHT** | 3.0 oz (85 g) |
| **MATERIAL** | 7075 aluminum, all components |
| **BORE** | 0.240 in. (6.1 mm) |
| **INTERNALS** | Blast damper + 7 identical baffles |
| **WRENCH FLATS** | 15/16 in., mount and front cap |
| **RATED FOR** | Semi-auto, bolt, lever and single-shot firearms |
| **NOT RATED FOR** | Full-auto fire · any cartridge but .22 LR |

## INCLUDED WRENCH

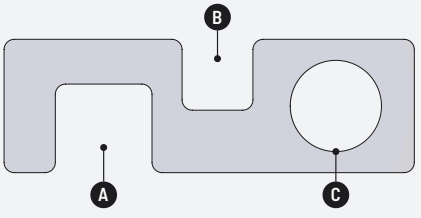


- **A** Fits the mount and front cap flats.
- **B** For another Valley Armory suppressor. Not used on the LQ22.
- **C** Levers stuck baffles apart (page 14).

# COMPONENTS

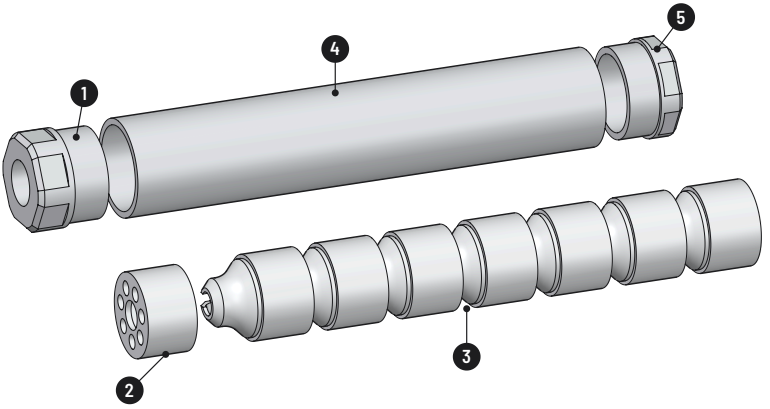


| | | |
|---|---|---|
| 1 | **MOUNT** | Threads onto your barrel (1/2"-28) and into the rear of the tube. 15/16 in. wrench flats. |
| 2 | **BLAST DAMPER** | Takes the initial blast. The perforated face points toward the mount. |
| 3 | **BAFFLES ×7** | Identical and interchangeable. The cone end points toward the mount, with all clips lined up. |
| 4 | **TUBE** | Carries the serial number and markings. Never clamp it in a vise. |
| 5 | **FRONT CAP** | Threads into the front of the tube and clamps the stack. 15/16 in. wrench flats. |

**⚠ CAUTION**

The blast damper and baffles are a matched set. Never add, remove or substitute parts. Every part must be installed and facing the correct direction before you fire.

# INSIDE THE LQ22

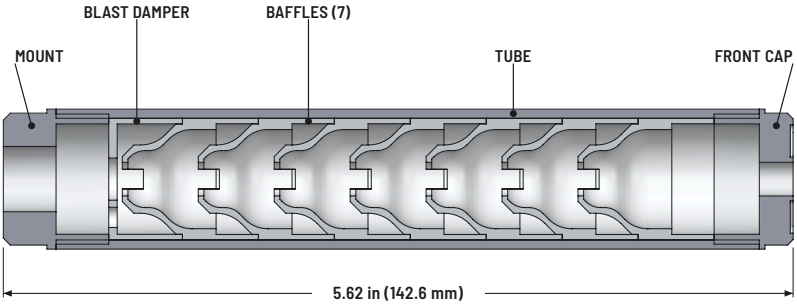


TUBE Ø 1.00 in (25.3 mm) · BORE Ø 0.240 in · 15/16 in WRENCH FLATS

## HOW IT WORKS

When a cartridge fires, hot, high-pressure gas follows the bullet out of the barrel. The blast damper takes the first blast and spreads it into the opening chamber. Each baffle then catches part of the remaining gas in its own chamber, so the gas leaves the front cap slower, cooler and at much lower pressure. That is what you hear as a quieter shot. The bullet passes through the center of every part without touching it, which only works when every part is present, clean, fully seated and facing the right direction.

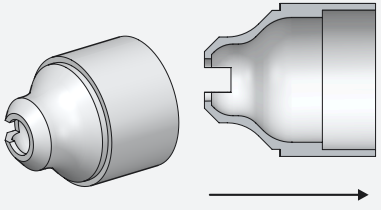


**Baffle (×7).** The clipped cone points toward the mount. Line up all seven clips for the quietest results (page 18).

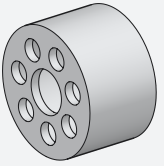

**Blast damper.** The perforated face points toward the mount. The open end receives the first baffle's cone.

# AMMUNITION & HOST FIREARMS

## USE

- Factory-new **.22 Long Rifle** only.
- **Subsonic or standard-velocity** loads are quietest. Choose ammunition rated under **1,100 fps**.
- High-velocity .22 LR (over 1,100 fps) is safe, but its sonic crack cannot be suppressed.

## NEVER USE

- ✕ .22 WMR, .17 HMR, .17 WSM, .17 Mach 2 or any centerfire cartridge.
- ✕ .22 LR shotshells ("snake shot"), which can damage baffles.
- ✕ Extra-long or heavy specialty bullets that may not stabilize in your barrel.
- ✕ Reloaded, damaged or corroded ammunition.

## HOST FIREARMS

- Semi-auto, bolt, lever and single-shot rifles and pistols in .22 LR.
- **1/2"-28 threads** concentric with the bore, ending in a square (90°) shoulder.
- Threads up to **0.70 in.** long. Longer threads can stop the suppressor from seating.
- Mount directly on the barrel, never over a brake, compensator or flash hider.

## FIRST-ROUND POP

The first shot from a cool suppressor is often a little louder, because oxygen in the chambers burns. It is normal.

**⚠ WARNING**

The LQ22 is not rated for full-automatic fire. Use with automatic firearms can damage the suppressor and voids the warranty.

# INSTALLING ON YOUR FIREARM

**⚠ WARNING**

Remove the magazine and open the action. Visually and physically confirm the chamber is empty. Keep the muzzle pointed in a safe direction the whole time.

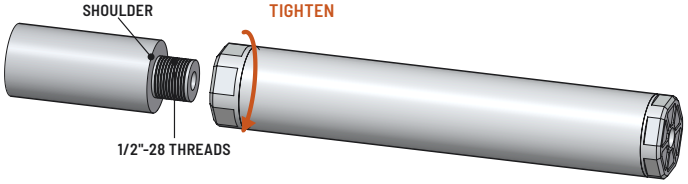


**1 CHECK THE SUPPRESSOR.**

Make sure the front cap is fully seated and both end caps are tight. Look through the bore to confirm nothing is inside.

**2 PREPARE THE BARREL.**

Remove the thread protector or any muzzle device. Wipe the threads and shoulder clean and check them for damage.

**3 THREAD IT ON BY HAND.**

Turn the suppressor clockwise (righty-tighty), being careful not to cross-thread it, until it stops firmly against the barrel shoulder. Hand-tight only. Never use a wrench or pliers to install it.

## 4 CONFIRM IT IS SEATED.

There must be no gap between the mount and the barrel shoulder, and the suppressor must not wobble.

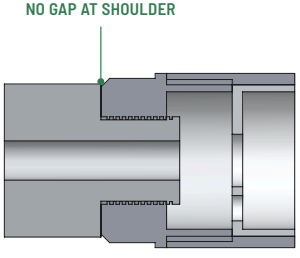


Correct: the mount is tight against the shoulder.

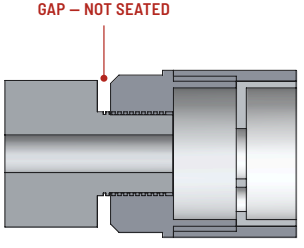


Incorrect: do not fire. Remove it and find the cause.

**WARNING**

If the suppressor binds, feels gritty, or stops before it reaches the shoulder, **stop**. Do not force it, and do not fire. Clean and inspect the threads on the barrel and the mount. If it still will not seat, have the barrel checked by a qualified gunsmith.

## WHILE SHOOTING

- After unloading, check that the suppressor is tight after **every magazine**. Rimfire suppressors loosen as they heat and cool.
- Stop if you notice a change in sound, a shift in point of impact, or visible damage. Unload, let it cool, and inspect it (page 17).
- Keep the hot suppressor away from anything flammable.

# REMOVING & STORAGE

1. **UNLOAD AND LET IT COOL.**
   Remove the magazine, open the action, and confirm the chamber is empty. Wait until the suppressor is cool, or wear heat-resistant gloves.

2. **UNSCREW IT.**
   Turn the suppressor counter-clockwise by hand until it comes off. If it is stuck, fit the large opening of the included wrench on the **mount** flats only. Never grip the tube with pliers or a vise.

3. **PROTECT THE THREADS.**
   Put the thread protector back on the barrel.

## STORAGE & TRANSPORT

- Let the suppressor cool to air temperature before you put it in a case, bag or vehicle.
- Store it clean, dry and lightly oiled, locked away from children and unauthorized people.
- Do not store it damp in a sealed case, or near corrosive cleaning products.
- If you will not use it for a long time, store it disassembled so the threads do not seize.

# DISASSEMBLY

**⚠ WARNING**

Remove the suppressor from the firearm and let it cool completely before you take it apart. Never disassemble or clean a suppressor while it is attached to a firearm.

## 1 REMOVE THE FRONT CAP.

Fit the large opening of the included wrench onto the front cap flats. Grip the tube firmly (a rubber jar-opener pad helps) and turn the cap counter-clockwise. If you cannot hold the tube, put a second 15/16 in. wrench on the mount flats. Either end may come loose first.

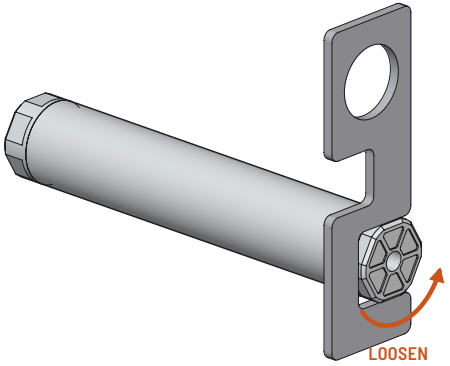


## 2 PUSH OUT THE STACK.

Slide a 3/8 in. wooden dowel through the mount until it rests on the blast damper, then push. The blast damper and baffles slide out the front. If the stack is tight, tap the dowel lightly with a rubber mallet. Never use a metal rod.

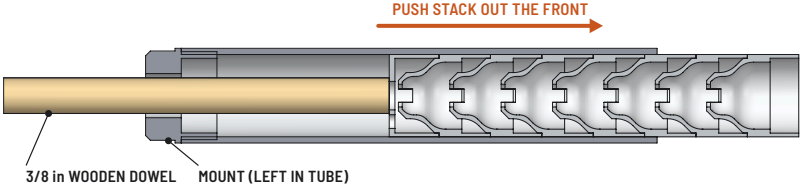


### KEEP THE PARTS TOGETHER

Lay the parts out in order on a clean towel as you remove them: mount, blast damper, seven baffles, tube and front cap.

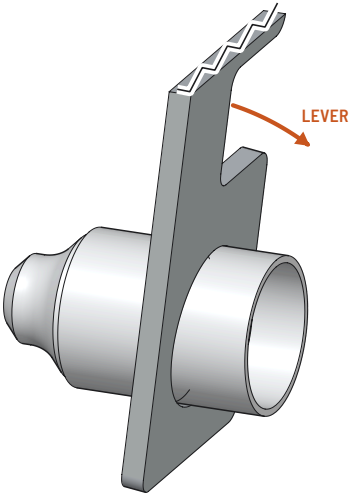


### 3 SEPARATE THE BAFFLES.

Pull them apart by hand. If they are stuck, slide the hole in the included wrench over the front baffle, down to the joint, and tilt the handle. The lever action pops the baffles apart. Soak badly stuck baffles first. Never pry with a screwdriver or knife.

### 4 REMOVE THE MOUNT.

Hold the tube and turn the mount counter-clockwise with the large opening of the included wrench. Remove the mount at every cleaning so its threads stay clean and do not seize.

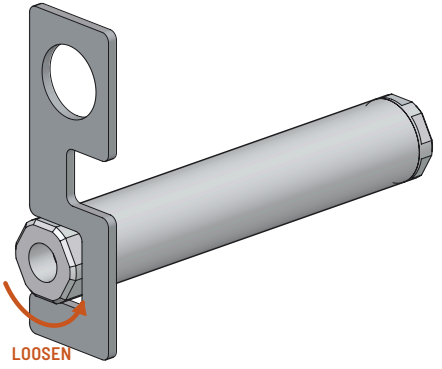


**⚠ CAUTION**

Do not clamp the tube in a vise, use pliers or toothed strap wrenches, or hammer on any part. The thin aluminum tube can be dented or crushed.

# CLEANING

Rimfire ammunition leaves lead, wax and carbon that harden over time. Clean the LQ22 at least every **500 rounds**, and any time it gets hard to take apart.

**⚠ WARNING**

Every LQ22 part is aluminum. Many popular suppressor-cleaning methods will **dissolve or pit aluminum** and destroy its finish. **Never clean the LQ22 in an ultrasonic cleaner.** Damage from prohibited cleaners or methods is not covered by the warranty.

### ✓ SAFE FOR THE LQ22

- Gun solvents and degreasers labeled **safe for aluminum**
- Soaking in an aluminum-safe solvent to loosen carbon
- Nylon or brass brushes, cotton swabs and patches
- A 12-gauge nylon bore brush inside the tube
- Compressed air to dry parts

### ✕ NEVER USE

- **Ultrasonic cleaners**, with any solution
- Caustic or alkaline cleaners: oven cleaner, lye, purple or "heavy-duty" degreasers
- Acid lead removers, including vinegar and peroxide "dips"
- Ammonia-based copper solvents
- Steel-pin or abrasive tumbling; bead or sand blasting
- Steel wire brushes, files or scrapers
- Heat or a torch to burn off fouling

**⚠ CAUTION**

Wear nitrile gloves and eye protection, and work in a well-ventilated area. Fouling contains lead. Dispose of used solvent and debris according to local regulations.

## CLEANING STEPS

**1 SOAK.**

Disassemble the suppressor completely (page 13). Soak the blast damper, baffles, mount and front cap in an aluminum-safe solvent, following the solvent maker's soak times.

**2 SCRUB.**

Brush every surface with nylon or brass brushes, especially the cones, the baffle bores and the inside of the mount. Scrub the inside of the tube with a 12-gauge nylon bore brush.

**3 CLEAN THE THREADS.**

Brush the threads inside both ends of the tube and on the mount and front cap until no carbon remains.

**4 DRY AND PROTECT.**

Rinse if the cleaner requires it, then dry every part completely. If you used a water-based cleaner, wipe the parts with a light coat of gun oil.

### SERVICE SUPPLIES

- Included LQ22 wrench
- 3/8 in. wooden dowel, about 8 in. long
- Nylon or brass brushes
- 12-gauge nylon bore brush
- Aluminum-safe gun solvent
- Anti-seize or gun grease
- Nitrile gloves
- Eye protection
- Clean towel or tray

# INSPECTION

Inspect every part each time you clean the suppressor, and any time you suspect a problem. Use good light and check each part on its own.

| PART | LOOK FOR |
|---|---|
| **Tube** | Dents, bulges, cracks, or damaged threads at either end |
| **Mount** | Damaged, stretched or galled threads in the barrel bore or on the tube threads; cracks |
| **Front cap** | Damaged threads; a bore that is no longer round; shiny gouges or lead smears at the bore |
| **Blast damper** | Cracks, erosion or bent edges around the perforations; a warped sleeve |
| **Baffles** | Shiny gouges, nicks or lead smears on the cone tip and clip; cracks; bent or out-of-round cups |

**⚠ WARNING**

Bright metal, gouges or lead smears around a baffle bore usually mean a bullet has struck the suppressor. **Stop using it.** Check your barrel threads and assembly, and contact Valley Armory before firing again. Never fire a suppressor with cracked, bulged or damaged parts.

# REASSEMBLY

Parts must be clean and dry. Order, direction and clip alignment all matter.

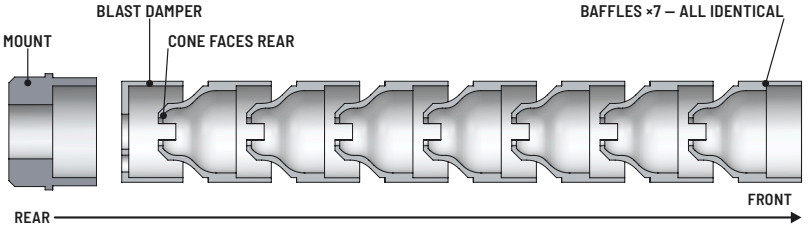


### 1 INSTALL THE MOUNT.

Apply a thin film of anti-seize or gun grease to the mount's tube threads. Thread the mount into the rear of the tube by hand, then snug it with the included wrench. Firm is enough. Do not over-tighten.

### 2 INSERT THE BLAST DAMPER.

Stand the tube on its mount. Drop the blast damper in from the front, **perforated face first**, and push it down until it sits flat against the mount.

### 3 STACK THE BAFFLES AND LINE UP THE CLIPS.

The LQ22 is quietest when the **clips**, the slots cut into each baffle's cone, all line up. Outside the tube, nest the baffles one at a time, cone into cup. After adding each one, hold the stack up to a light and look through the bore. Turn the new baffle until you see a **keyhole-shaped opening** all the way through.

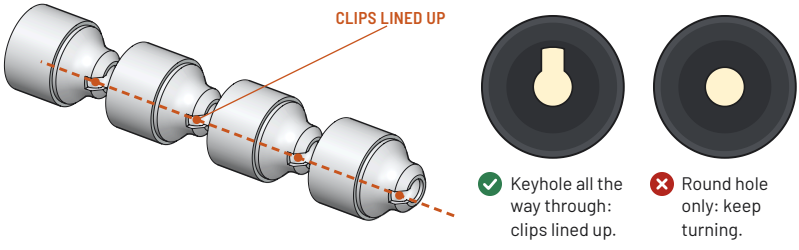

## 4 INSERT THE STACK.

Slide the stacked baffles into the tube, **cone end first**, until they seat on the blast damper. Keep the stack together so the clips stay lined up.

## 5 CHECK THE STACK HEIGHT.

The top of the last baffle should sit about **5/16 in. (8 mm)** below the end of the tube. Higher means a part is reversed or not seated. Lower means a part is missing.

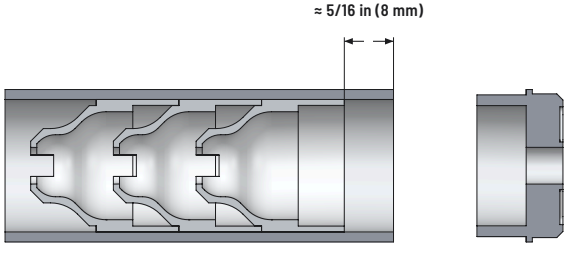


## 6 INSTALL THE FRONT CAP.

Apply a thin film of anti-seize or gun grease to the front cap threads. Thread the cap in by hand, then snug it with the included wrench until its flange seats against the end of the tube with **no gap**. The cap clamps the stack so nothing can shift.

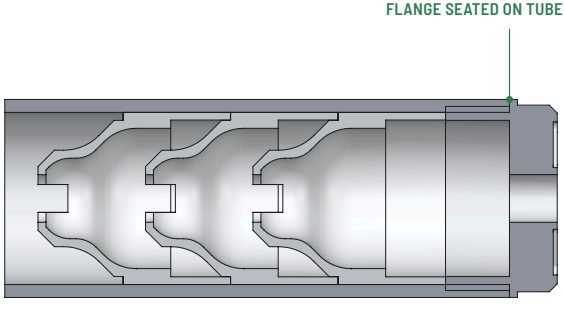

## 7 FINAL CHECK.

Hold the suppressor up to a light and look through the bore from both ends. You should see a clear, round opening. Shake it gently; nothing should rattle.

**⚠ WARNING**

If the front cap will not seat flush, do not force it and do not fire. Disassemble the suppressor and check that every part is present, clean, fully seated and facing the right direction.

### BEFORE EVERY USE

- ☐ Mount snug in the tube
- ☐ Blast damper in, perforated face toward the mount
- ☐ All 7 baffles in, cone end toward the mount
- ☐ Baffle clips lined up
- ☐ Stack about 5/16 in. below the tube end before capping
- ☐ Front cap flange flush against the tube
- ☐ Bore clear, nothing rattles
- ☐ Firearm unloaded before you install it
- ☐ Fully seated on the barrel shoulder, no gap

# TROUBLESHOOTING

| PROBLEM | LIKELY CAUSE | WHAT TO DO |
|---|---|---|
| **Will not thread fully onto the barrel** | Dirty or damaged threads; threads not 1/2"-28 or longer than 0.70 in. | Stop. Clean and inspect both sets of threads. Confirm pitch and length. See a gunsmith if needed. |
| **Loosens while shooting** | Heat cycling; not fully tightened; shoulder not square | Tighten firmly by hand and check after every magazine. Have the shoulder checked. |
| **Front cap will not seat flush** | A part reversed, missing or not seated; debris between parts | Disassemble and check the order and direction of every part (page 18). |
| **Stack will not push out** | Carbon and lead buildup | Soak the tube with the stack inside, then tap the dowel gently. Clean more often. |
| **Baffles stuck together** | Carbon and lead buildup | Soak, then lever them apart with the wrench hole (page 14). Never use a screwdriver. |
| **Mount or front cap seized in the tube** | Carbon in the threads; no anti-seize used | Soak the threaded end, then use the included wrench and a second 15/16 in. wrench on the flats. Never use a vise. |
| **First shot louder than the rest** | First-round pop | Normal. See page 9. |
| **Sounds louder than usual** | Baffle clips not lined up; loose suppressor or cap; missing or damaged part | Stop. Unload, let it cool, and inspect it (page 17). Line up the clips (page 18). |
| **Point of impact shifts; bright marks at a bore** | Possible baffle strike | Stop using the suppressor and contact Valley Armory. |

Still having trouble? Contact Valley Armory. See the back cover for contact details.

# LIMITED LIFETIME WARRANTY

## WHAT IS COVERED

Valley Armory warrants the LQ22 against defects in materials and workmanship for as long as it is owned by the original registered purchaser. If it fails because of a defect, we will repair or replace it, at our option, at no charge for parts or labor. If an identical replacement is not available, we will provide a product of equal or greater value.

## WHAT IS NOT COVERED

- Misuse, abuse, neglect, accident or careless handling
- Any cartridge other than .22 LR, or ammunition this manual says not to use
- Full-automatic fire
- Baffle strikes from incorrect installation, misaligned or damaged barrel threads, or unsuitable ammunition
- Prohibited cleaning products or methods, including ultrasonic cleaning (page 15)
- Products modified, or repaired by anyone other than Valley Armory
- Normal wear, including finish wear; loss or theft

## GETTING SERVICE

**Contact Valley Armory before you ship anything.** We will confirm eligibility and send shipping instructions and a return authorization. Suppressors must be shipped in line with federal law. Have your serial number and proof of purchase ready.

## LIMITATIONS

This warranty applies only to the original registered purchaser and does not transfer. Valley Armory is not responsible for injury, death or property damage caused by unsafe, careless or illegal use, or by use that goes against this manual. To the extent allowed by law, Valley Armory is not liable for incidental or consequential damages, and its liability is limited to repairing or replacing the product. This warranty gives you specific legal rights, and you may have other rights that vary from state to state.

## OWNER'S RECORD

Record this information and store a copy separately from the suppressor. You will need the serial number for warranty service.

SERIAL NUMBER

DATE OF PURCHASE

PURCHASED FROM (DEALER)

REGISTRATION APPROVAL DATE

## NOTES

## PROTECT YOUR HEARING

A suppressor reduces the sound of a shot but does not eliminate it. Always wear hearing protection when shooting, suppressed or not.

## QUESTIONS & SERVICE


**valleyarmory.com**

907.982.9222

support@valleyarmory.com

PO Box 3451, Palmer, Alaska 99645


VALLEY ARMORY


© 2026 Valley Armory. All rights reserved. No part of this manual may be reproduced in any form without written permission. Specifications are subject to change without notice.



LQ22 Owner's Manual · Rev. B · 10/2026